Important
Installation only by qualified technicians.
Always inspect this product prior to any installation and check for damages etc.
Always use all four 10 mm mounting holes.
Always use all four M8 threads
Always use the correct fasteners:
4x M8x20 Screws DIN 912, 4x M8 washers DIN 125
Only use with compatible displays.
Make sure the structure carrying the overall weight is stable.
Only for indoor usage.
Only for vertical usage. (no tilting etc.)
Only use in the pictured orientation.
Do not exceed the maximum load weight of **100 kg**.

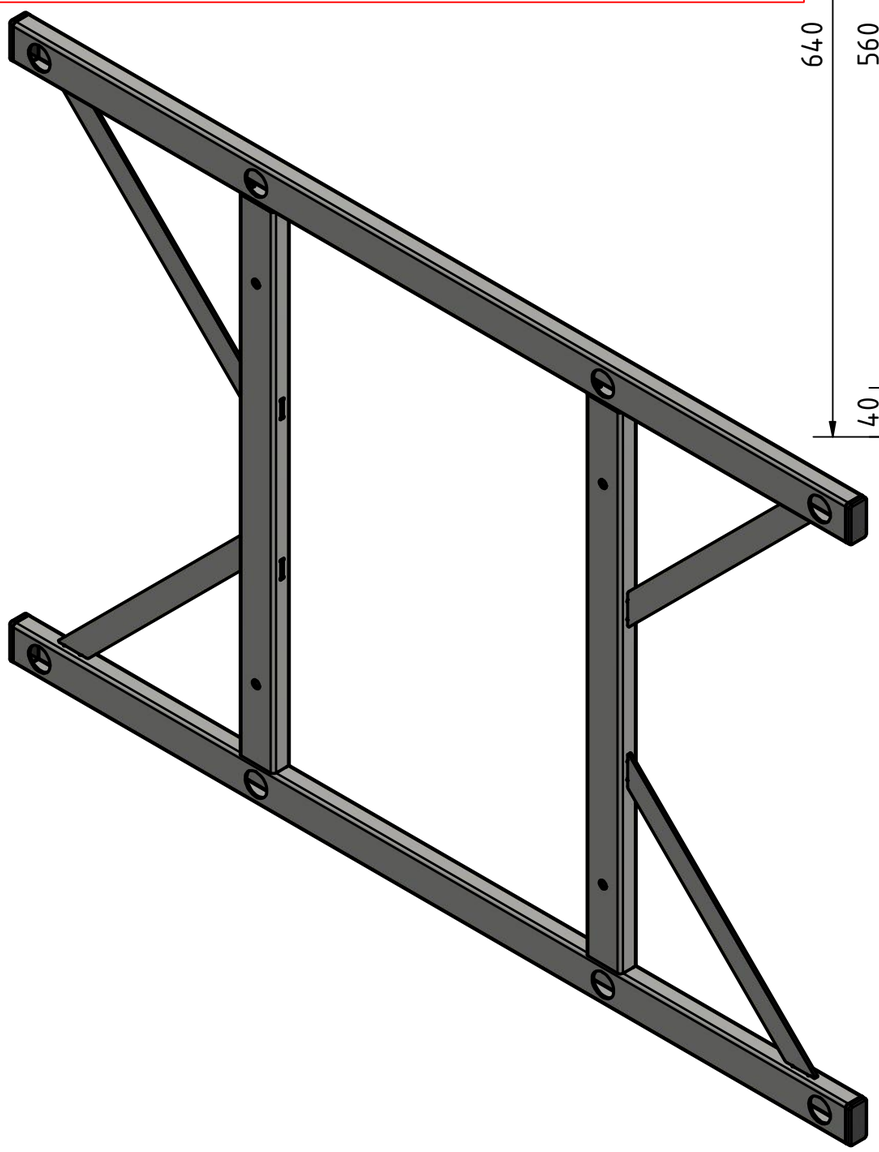

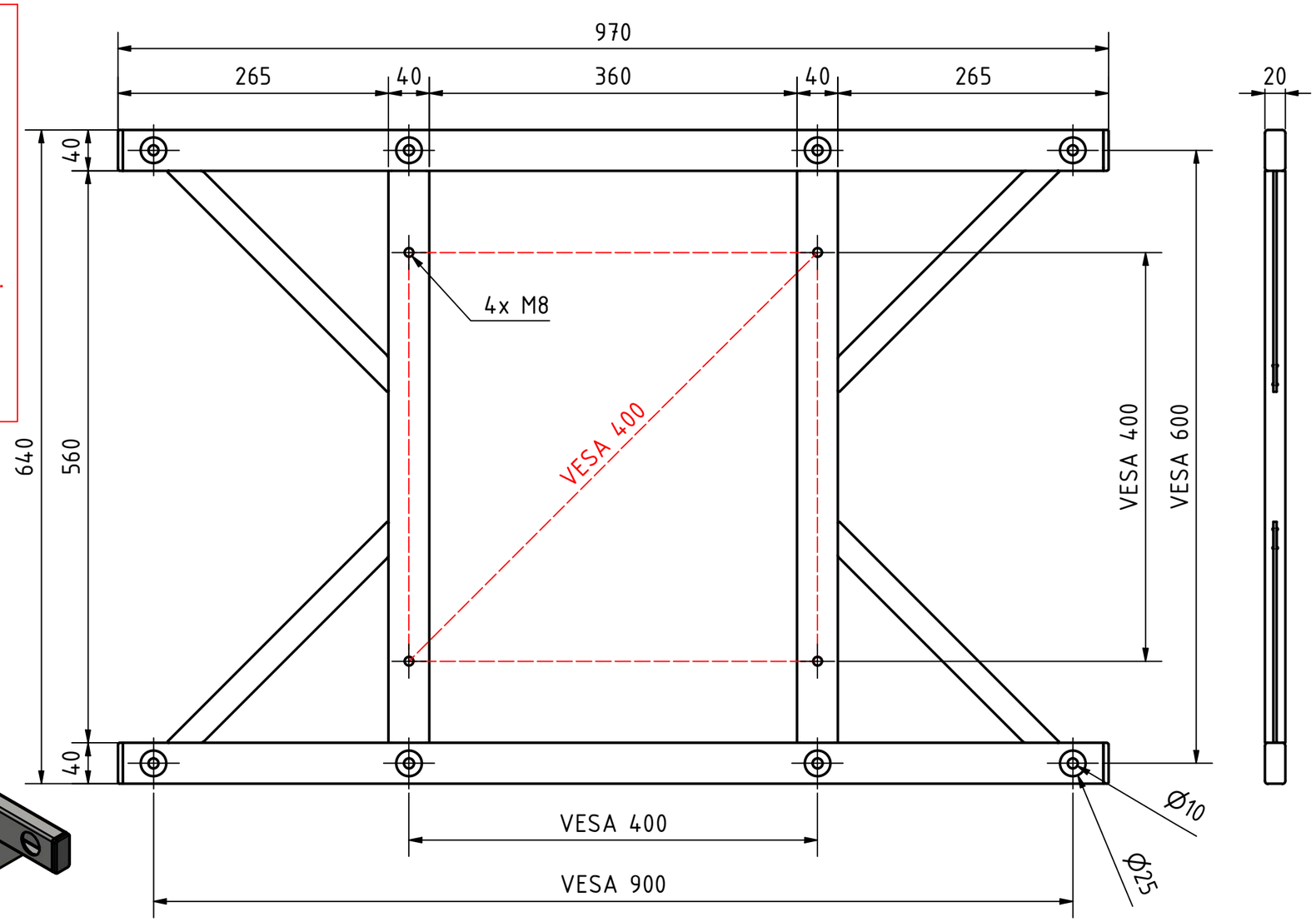

EXACT SOLUTIONS

© COPYRIGHT EXACT SOLUTIONS
This print and the information shown thereon, is the property of **EXACT SOLUTIONS**. It may not be delivered to others nor reproduced for general circulation without the written consent of the **EXACT SOLUTIONS**.

	Date	Name
Author	20.02.2020	Frank Scholven
Checked		
Approved		

Status	Change log	Date	Name

Dimenions in mm
Angles ±X.X°
Unless specified, tolerance is ±0,1mm

Material:
Revision: 00
Weight: 6,500 kg
Supplier:

Title:
Adapter Frame for Displays VESA 900x600 to 400x400

PartNr.: ABD-9644

SCALE: 1 :5
A3
Number of pages: 1/1