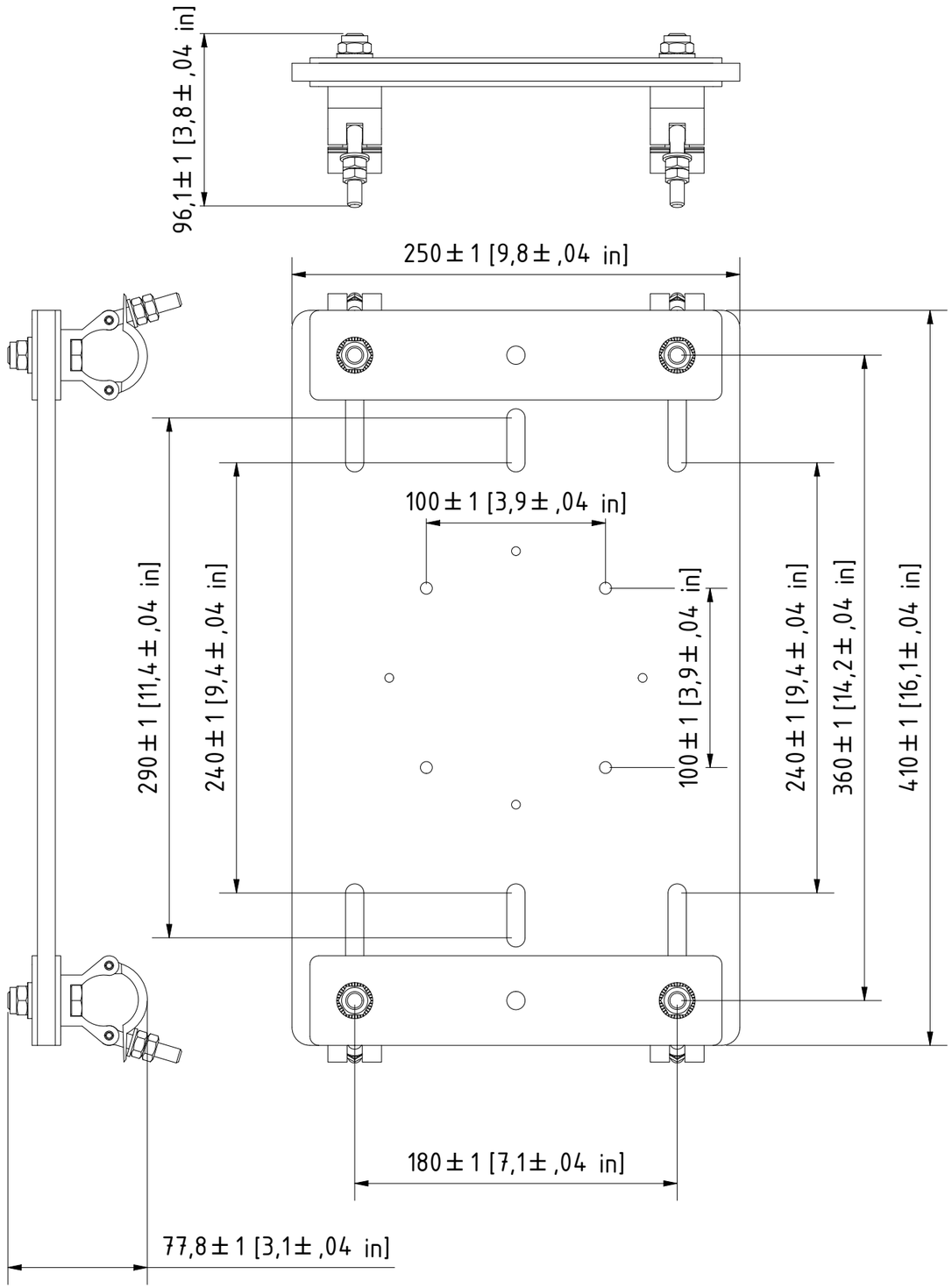

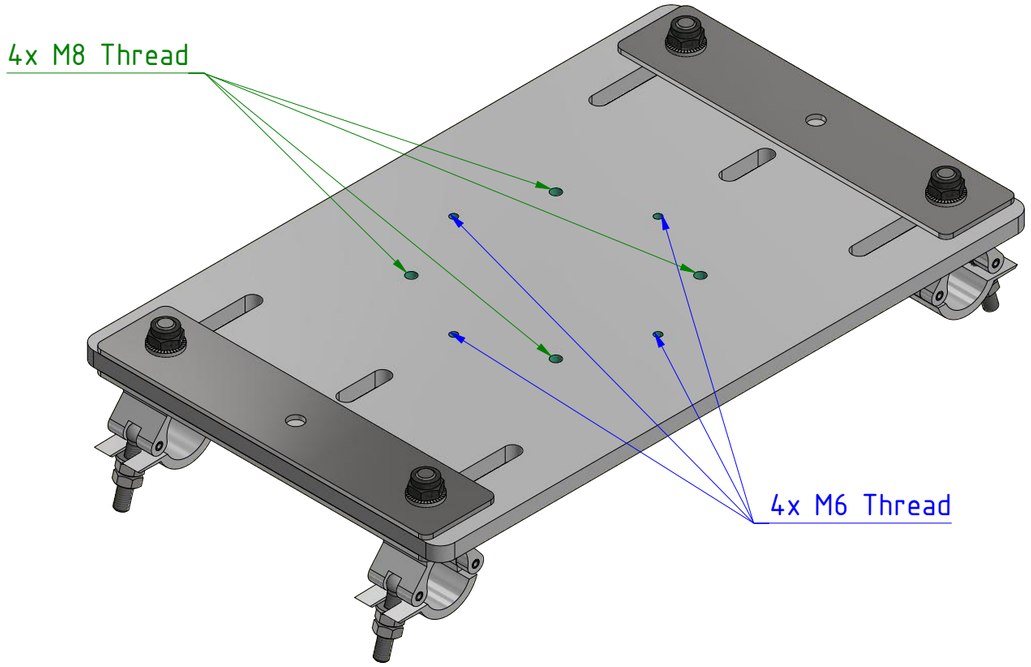

EXACT SOLUTIONS

© COPYRIGHT EXACT SOLUTIONS
This print and the information shown thereon, is the property of **EXACT SOLUTIONS**. It may not be delivered to others nor reproduced for general circulation without the written consent of the **EXACT SOLUTIONS**.

	Date	Name
Author		Victor Ibanescu
Checked		
Approved		

Dimensions in mm

Status	Change log	Date	Name

Material:

Revision: 01

Weight: 4.700 kg

Supplier:

Title:
Portrait adapter for projector frames
(ET-PFD560PA, ET-CLP-P)

PartNr.: FRAME-PF-UNI-PORAD

SCALE: 1 : 3

A3

Number of pages: 1/2

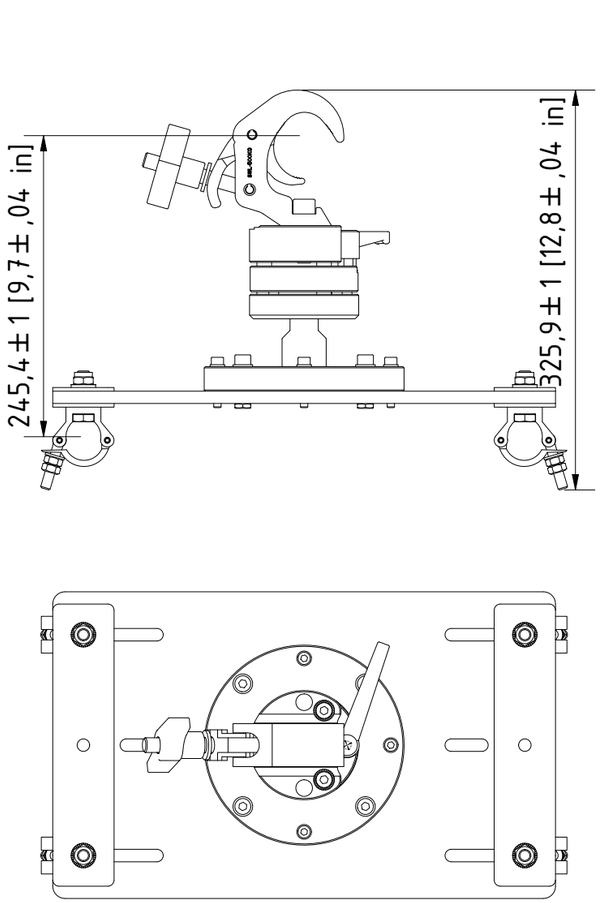

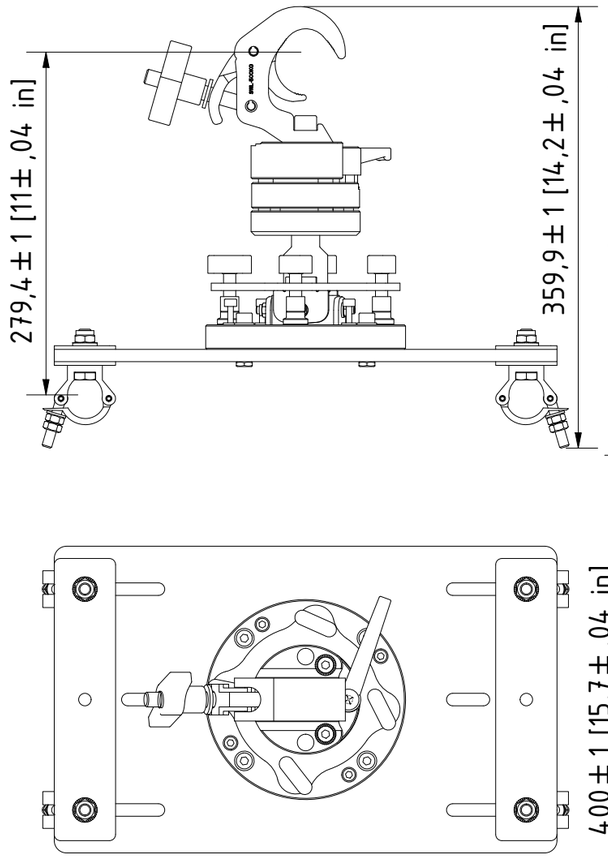

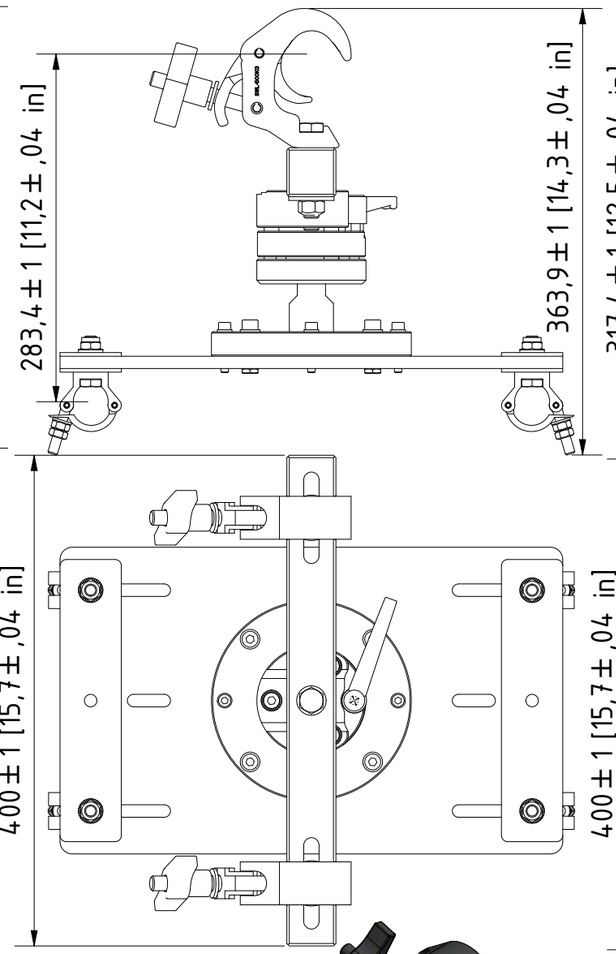

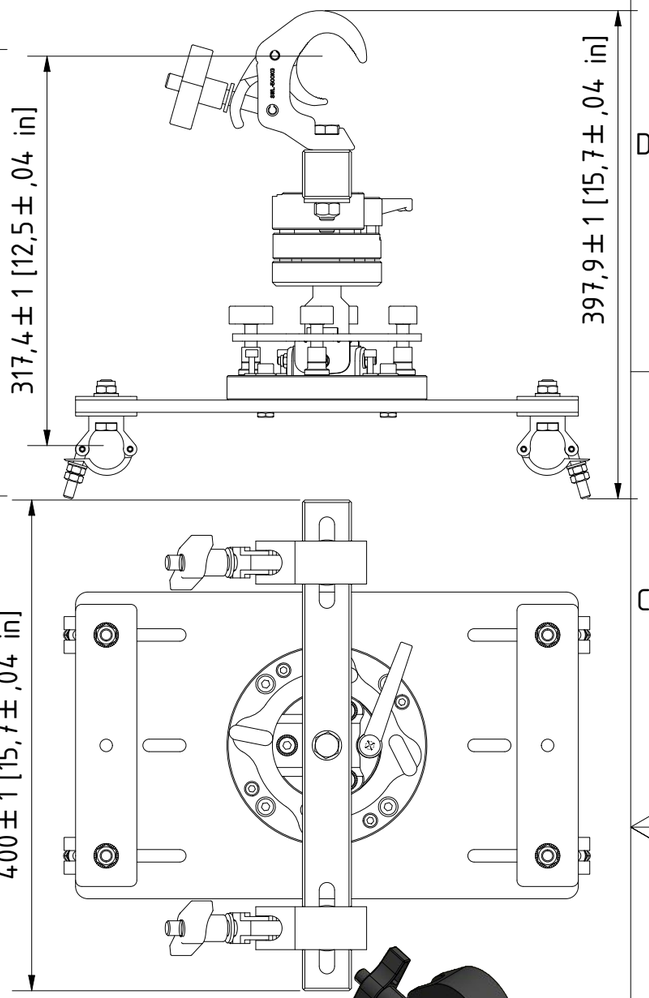

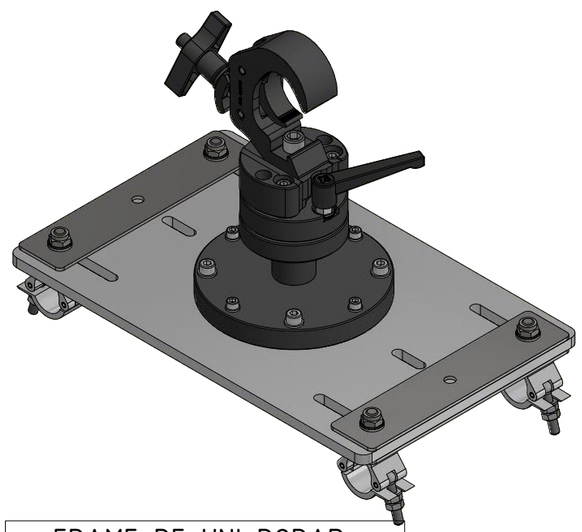

FRAME-PF-UNI-PORAD
with EVO-LINK-200

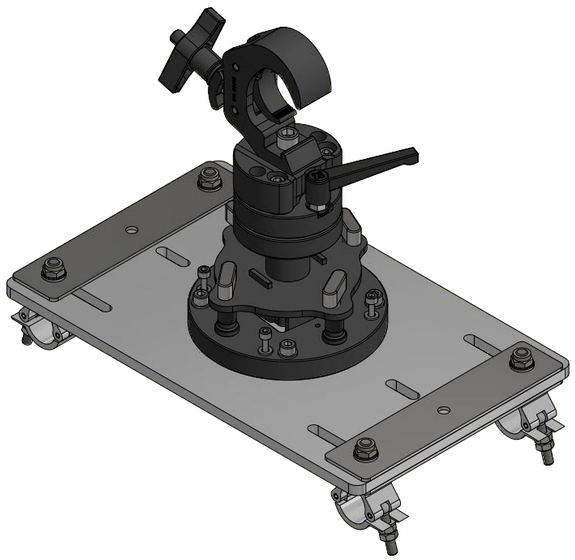

FRAME-PF-UNI-PORAD
with EVO-LINK-201

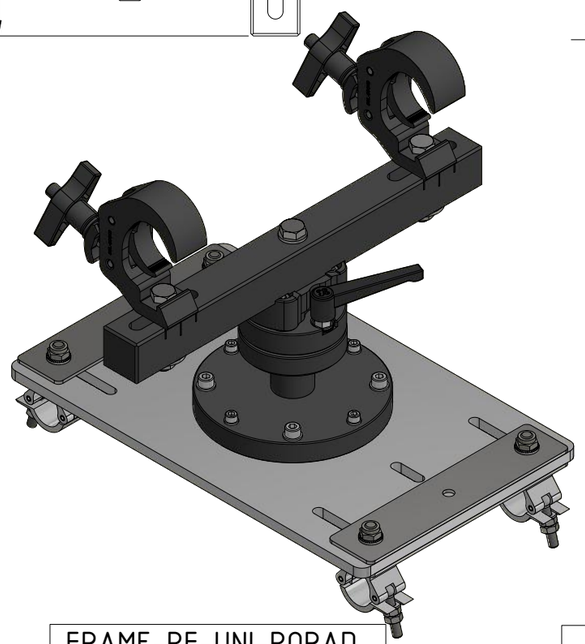

FRAME-PF-UNI-PORAD
with EVO-LINK-210

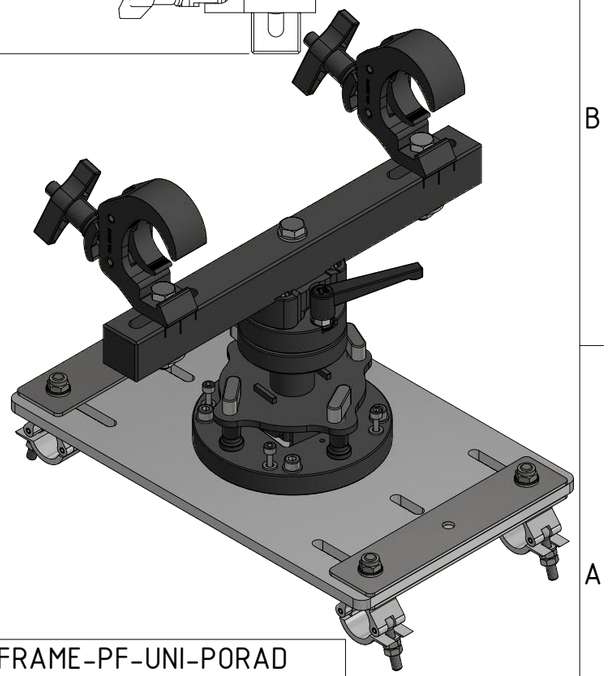

FRAME-PF-UNI-PORAD
with EVO-LINK-211