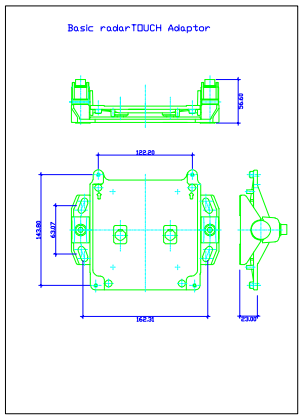

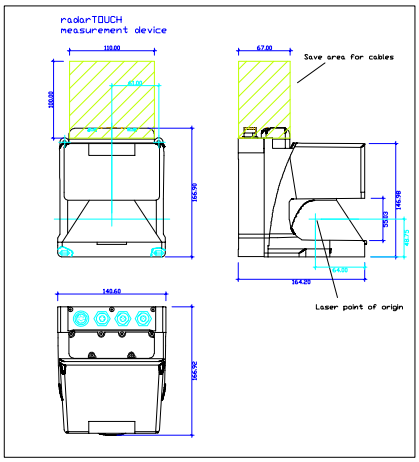

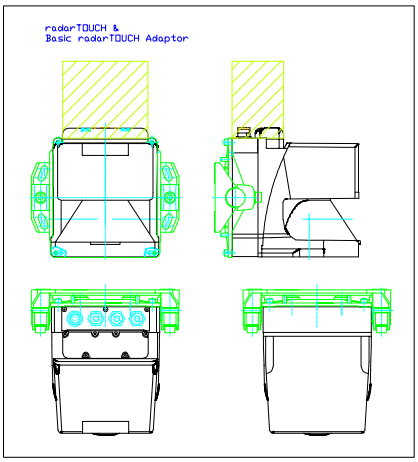

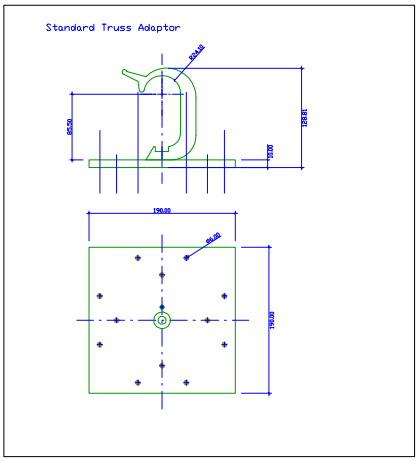

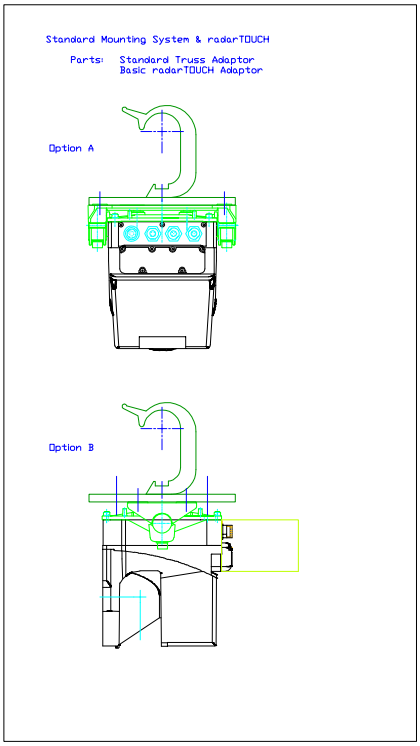

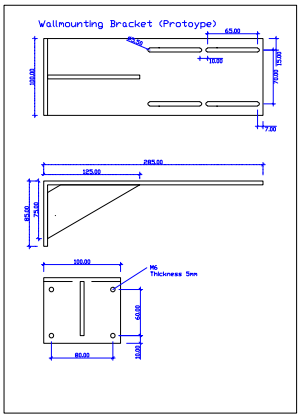

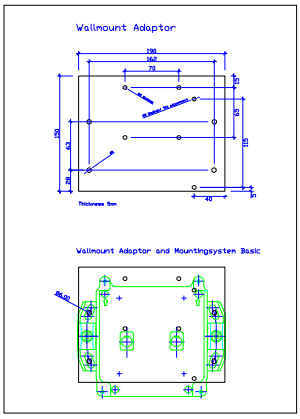

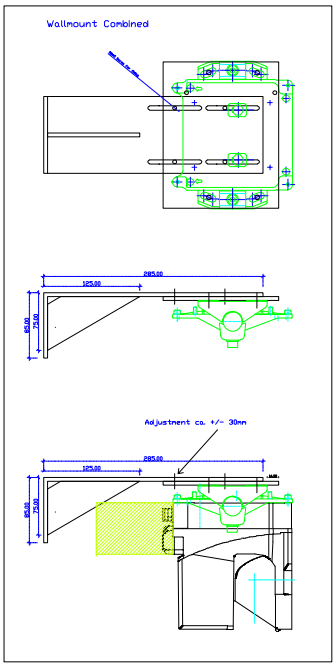

EXACT SOLUTIONS

	Date	Name
User	29.11.2019	TSN

Title:

RADARTOUCH_OVERVIEW